DS Sleeve

Features

WATCH ON YouTube

- Prevents coolant and chips from damaging live tool stations
- Accepts DS Series holders to perform various back working
- Designed exclusively for 22mm(.886") and 34mm(1.339") round shank stations
- Compatible with 16mm(.630") / 22mm(.886") round shank DS Series holders

First Recommendation for Turning

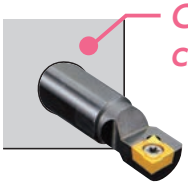

Coolant and chips sneak in.

When DS holders are used directly in live tool stations, coolant and chips sneak in from the flat of holders to damage the live stations

How it works

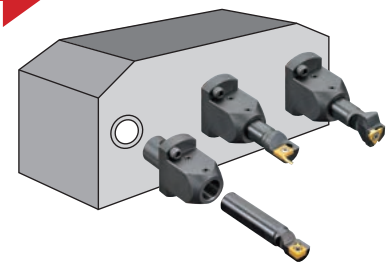

Stop coolant and chips from damaging live tool stations.

By using the DS Sleeve, you can use the DS Series holders without any worry about damaging live stations

For Back 4-spindle unit

SS-DSU-SK

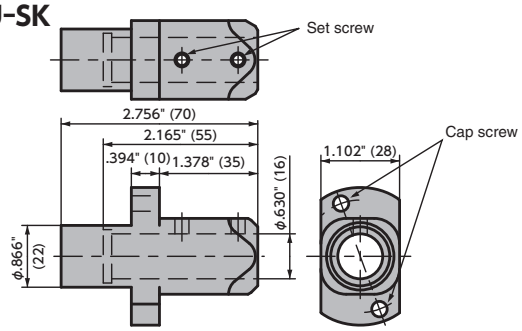

SS-DSU-L23

For DS-ACH series

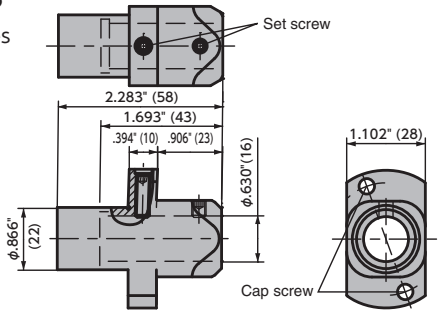

For Back 8-spindle unit

SS-DSU-B8L23

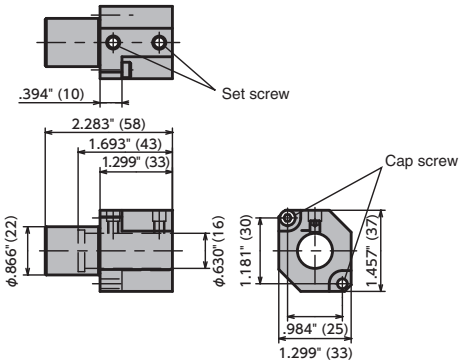

SS-DSU-B8D34

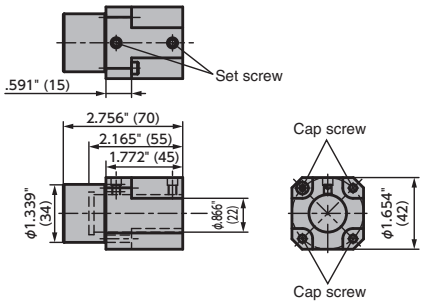

Item number	Stock	Spare parts				Coment
		Cap screw	Wrench	Set screw	Wrench	
SS-DSU-SK	●	CS0520	LW-4	SS0506	LW-2.5	
SS-DSU-L23	●	CS0520	LW-4	SS0506 SS0515	LW-2.5	For DS-ACH Series
SS-DSU-B8L23	●	CS0420	LW-3	SS0506	LW-2.5	Can take DS-ACH Series
SS-DSU-B8D34	●	CS0425	LW-3	SS0506	LW-2.5	

Machine Information

● : Stock
● : Stock (Newly added)
■ □ R L : While stocks last
R L : Stock (Right / Left-hand only)
R L : Stock (Right / Left-hand only, Newly added)
Ⓜ : Mirror finish
○ : 1-2 week delivery
○ : 1-2 week delivery (Newly added)
: Coolant through
ⓇⓁ : 1-2 week delivery (Right / Left-hand only)
ⓇⓁ : 1-2 week delivery (Right / Left-hand only, Newly added)

● STAR

Machine Model	Gang Station					Turret Station						Sleeve Station		Hand	DS-Sleeve item number	Max cutting dia
	Inch		Metric		Number of tools	Inch		Metric		Number of tools		Inch	Metric			
	h×b	L	h×b	L		h×b	L	h×b	L	Turret	Station	"	mm			mm
ECAS-12			□10	95-150	6								φ22	R	SS-DSU-L23 SS-DSU-SK	φ13
ECAS-20			□12(16)	80-144	6								φ22	R	SS-DSU-L23 SS-DSU-SK	φ20
ECAS-20T								□12(16)	80	3	8/Turret		φ22	R	SS-DSU-B8D34	φ20
ECAS-32T			□16	80-120	4			□16	60-78	2	10/Turret		φ22/32	R	SS-DSU-SK	φ32
JNC-10								□8	65	1	6		-	L	—	φ10
JNC-16								□10	80	1	6		-	L	—	φ16
JNC-25/32								□16	78-120	1	10		φ22	R	—	φ25/φ32
KJR-16B/25B								□16	78	1	12/16		φ22	R	—	φ16/φ25
KNC-16/20								□16	68	1	16		φ22	R	—	φ16/φ20
KNC-25II/32II								□16	78	1	20		φ22/32	R	—	φ25/φ32
RNC-10/16			□10	80-120	5								φ22	R	—	φ10/φ16
RNC-16II/16BII			□10	80-120	5								φ22	R	—	φ16
SA-16R			□10	95-120	6								φ22	R	—	φ16
SB-12II/12R/16II	□1/2 (3/8)		□12(10)	95-130	6(7)								φ22	R	SS-DSU-L23 SS-DSU-SK	φ12/φ13/φ16
SB-16/16R	□1/2 (3/8)		□12(10)	95-130	6(7)								φ22	R	SS-DSU-L23 SS-DSU-SK	φ16
SB-20/20R	□1/2 (3/8)		□12(10)	95-130	6(7)								φ22	R	SS-DSU-L23 SS-DSU-SK	φ20
SC-20			□12	95-130	6								φ22	R	—	φ20
SE-12/12B, 16/16B			□10	95-120	5								φ22	R	—	φ13/φ16
SF-25								□16	73-98	1	10		φ22/32	R	—	φ25
SG-42								□16(20)	84-88	1	10		φ22/32	R	—	φ42
SH-12/16			□10	95-120	5								φ22	R	—	φ13/φ16
SH-7			□8	95-120	5								φ22	R	—	φ7
SI-12/12C			□10	80-130	6								φ22	R	—	φ13
SR-10J	□5/16		□8	67-110	6								φ22	R	SS-DSU-L23 SS-DSU-SK	φ10
SR-16/20			□12	95-120	5								φ22	R	—	φ16/φ20
SR-20J	□1/2		□12	100-135	6								φ22	R	SS-DSU-L23 SS-DSU-SK	φ20
SR-20R/20RII/20RIII			□12	100-135	6								φ22	R	SS-DSU-L23 SS-DSU-SK	φ20
SR-20RIV	□1/2		□12	100-130	7								φ22	R	SS-DSU-B8L23	φ20
SR-25J/32J	□5/8		□16	95-155	6								φ22/32	R	SS-DSU-L23 SS-DSU-SK	φ25/φ32
SR-32, SR-32J, SR-38			□16	100-135	6								φ22	R	—	φ32
SR32JII	□5/8		□16		6								φ22	R	SS-DSU-B8L23 SS-DSU-B8D34	φ32
SST-16			□12	95-115	5								φ22	R	—	φ16
ST-20								□12(16)	70-78	3	8/Turret		φ22	R	—	φ20
ST-38								□16(20)	85	3	10/Turret		φ22/32	R	—	φ38
SV-12/20			□12	95-135	4			□12	70-78	1	8		φ22	R	—	φ13/φ20
	□1/2		□12/□16	95-135	5			□16	65-70	1	8			R	—	
SV-32			□16	95-135	4			□16	80-88	1	10		φ22/32	R	—	φ32
SV-32J/32JII			□16	95-135	4			□16	65-70	1	8		φ22/32	R	—	φ32
SV-38R			□16+□20 (Cut off)	95-135	5			□16(20)	84-88	1	10		φ22/32	R	SS-DSU-B8D34	φ38
SW-12RII			□10	80-115	6								φ16	R	SS-DSU-B8L23	φ13
SW-20	□1/2 (5/8)		□12(16)	80-144	6								φ22	R	SS-DSU-B8L23	φ20
SW-7			□8	80-120	4								—	R	—	φ7