CTDP (Cut Duo) Series

Max. Cut-off Dia. -ϕ.787"(20.0mm), -ϕ1.339"(34.0mm)

CTDP

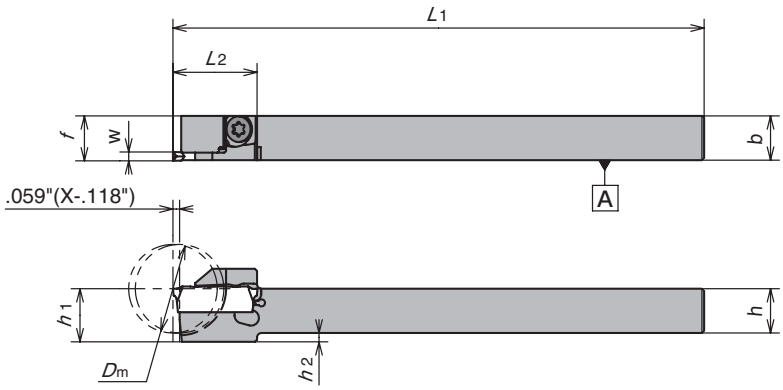

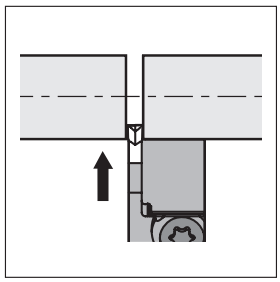

Figure-1

Right-Hand style shown

CTDP-OH2 (Coolant through)

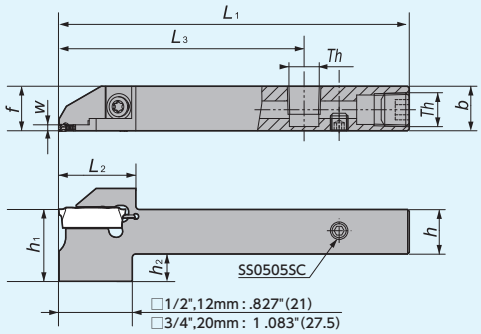

CTDPR/L10-IN, CTDPR/L16

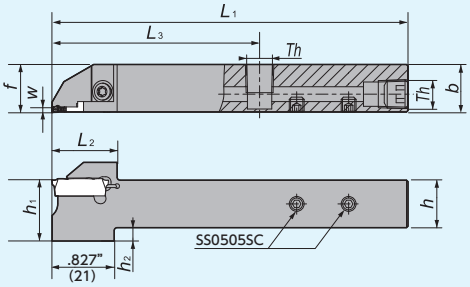

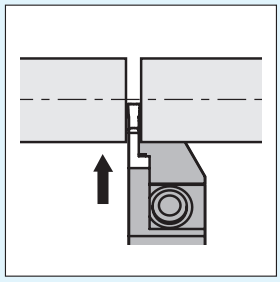

Figure-2

●Left-Hand holders are designed for Right-Hand machines

Th (Thread type)	
Inch size holder	: NPT1/8
Metric size holder	: Rc1/8(PT1/8)

Right-Hand style shown

CTDP-OH (Coolant through)

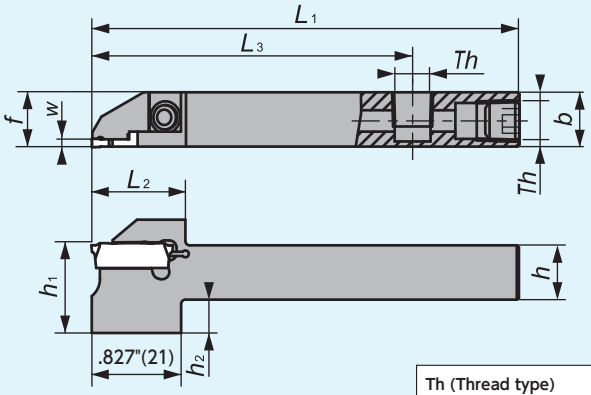

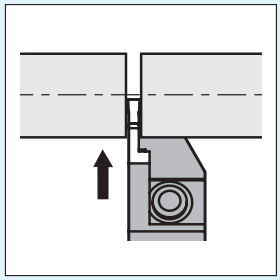

Figure-3

●Left-Hand holders are designed for Right-Hand machines

Th (Thread type)	
Inch size holder	: NPT1/8
Metric size holder	: Rc1/8(PT1/8)

Right-Hand style shown

CTDP Series - Toolholders

■CTDP

Gage Insert	Item Number	Figure	Stock R	Stock L	Max. Cut-off Dia. D_m (Inch)	(mm)	w (Inch)	(mm)	h (Inch)	(mm)	b (Inch)	(mm)	h_1 (Inch)	(mm)	L_1 (Inch)	(mm)	h_2 (Inch)	(mm)	L_2 (Inch)	(mm)	L_3 (Inch)	(mm)	Th	f (Inch)	(mm)	Clamp Screw	Wrench
CTDP20	CTDP R/L 06-IN-20D20	1	●	●	.787	20.0	.079	2.0	3/8		.394	10	3/8		4.729	120	.019	0.5	.748	19.0	–		–	.400	10.150	LRIS-4 × 12	LLR-25S
	CTDP R/L 08-IN-20D25	1	●	●	.984	25.0	.079	2.0	1/2		1/2		1/2		4.729	120	0	0	.866	22.0	–		–	.506	12.850	LRIS-4 × 12	LLR-25S
	CTDP R/L 10-IN-20D32	1	●	●	1.260	32.0	.079	2.0	5/8		5/8		5/8		4.729	120	0	0	1.083	27.5	–		–	.631	16.025	LRIS-5 × 10	LLR-28S
	CTDP R/L 12-IN-20D32	1	●	●	1.260	32.0	.079	2.0	3/4		3/4		3/4		4.729	120	0	0	1.083	27.5	–		–	.756	19.200	LRIS-5 × 10	LLR-28S
	CTDP R/L 10-20D20	1	○	○	.787	20.0	.079	2.0	.394	10	.394	10	.394	10	4.724	120	.079	2	.748	19.0	–		–	.400	10.15	LRIS-4 × 12	LLR-25S
	CTDP R/L 12-20D20	1	○	○	.787	20.0	.079	2.0	.472	12	.472	12	.472	12	4.724	120	0	0	.748	19.0	–		–	.478	12.15	LRIS-4 × 12	LLR-25S
	CTDP R/L 12-20D25	1	●	○	1.000	25.4	.079	2.0	.472	12	.472	12	.472	12	4.724	120	0	0	.866	22.0	–		–	.478	12.15	LRIS-4 × 12	LLR-25S
	CTDP R/L 16-20D25	1	●	○	1.000	25.4	.079	2.0	.630	16	.630	16	.630	16	4.724	120	0	0	.866	22.0	–		–	.636	16.15	LRIS-4 × 12	LLR-25S
	CTDP R/L 16-20D32A	1	○	○	1.260	32.0	.079	2.0	.630	16	.630	16	.630	16	4.724	120	0	0	1.083	27.5	–		–	.636	16.15	LRIS5 × 10	LLR-28S
	CTDP R/L 2012-20D32A	1	○	○	1.260	32.0	.079	2.0	.787	20	.472	12	.787	20	4.724	120	0	0	1.161	29.5	–		–	.478	12.15	LRIS5 × 10	LLR-28S
	CTDP R/L 20-20D32A	1	○	○	1.260	32.0	.079	2.0	.787	20	.787	20	.787	20	4.724	120	0	0	1.161	29.5	–		–	.793	20.15	LRIS5 × 10	LLR-28S
	CTDP R/L 08-IN-20D25-OH 💧	3	■	■	1.000	25.4	.079	2.0	1/2		1/2		.807	20.5	3.937	100	.307	7.8	.866	22.0	2.953	75	NPT1/8	.506	12.85	LRIS-4 × 12	LLR-25S
	CTDP R/L 08-IN-20D25-OH2 💧	2	●	●	1.000	25.4	.079	2.0	1/2		1/2		.807	20.5	3.937	100	.307	7.8	.866	22.0	2.756	70	NPT1/8	.506	12.85	LRIS-4 × 12	LLR-25S
	CTDP R/L 10-IN-20D25-OH 💧	3	●	●	1.000	25.4	.079	2.0	5/8		5/8		.807	20.5	3.937	100	.182	4.625	.866	22.0	2.953	75	NPT1/8	.631	16.025	LRIS-4 × 12	LLR-25S
	CTDP R/L 10-IN-20D25-OH2 💧	2	●	●	1.000	25.4	.079	2.0	5/8		5/8		.807	20.5	4.729	120	.182	4.625	.866	22.0	2.756	70	NPT1/8	.631	16.025	LRIS-4 × 12	LLR-25S
	CTDP R/L 12-20D25-OH 💧	3	■	■	1.000	25.4	.079	2.0	.472	12	.472	12	.807	20.5	3.937	100	.335	8.5	.866	22.0	2.953	75	Rc1/8(PT1/8)	.478	12.15	LRIS-4 × 12	LLR-25S
	CTDP R/L 12-20D25-OH2 💧	2	●	●	1.000	25.4	.079	2.0	.472	12	.472	12	.807	20.5	3.937	100	.335	8.5	.866	22.0	2.756	70	Rc1/8(PT1/8)	.478	12.15	LRIS-4 × 12	LLR-25S
	CTDP R/L 16-20D25-OH 💧	3	●	●	1.000	25.4	.079	2.0	.630	16	.630	16	.807	20.5	3.937	100	.177	4.5	.866	22.0	2.953	75	Rc1/8(PT1/8)	.636	16.15	LRIS-4 × 12	LLR-25S
	CTDP R/L 16-20D25-OH2 💧	2	●	●	1.000	25.4	.079	2.0	.630	12	.630	16	.807	20.5	4.729	120	.177	4.5	.866	22.0	2.756	70	Rc1/8(PT1/8)	.636	16.15	LRIS-4 × 12	LLR-25S
CTDP25	CTDP R/L 16-25D34A	1	●	○	1.339	34.0	.098	2.5	.630	16	.630	16	.630	16	4.724	120	0	0	1.122	28.5	–		–	.636	16.15	CS0516LSH	LW-3
	CTDP R/L 2012-25D34A	1	○	○	1.339	34.0	.098	2.5	.787	20	.472	12	.787	20	4.724	120	0	0	1.161	29.5	–		–	.478	12.15	CS0516LSH	LW-3
	CTDP R/L 20-25D34A	1	○	○	1.339	34.0	.098	2.5	.787	20	.787	20	.787	20	4.724	120	0	0	1.161	29.5	–		–	.793	20.15	CS0516LSH	LW-3
	CTDP R/L 12-IN-25D32-OH2 💧	2	●	●	1.260	32.0	.098	2.5	3/4		3/4		.945	24	4.729	120	.195	4.95	1.122	28.5	2.953	75	NPT1/8	.756	19.2	CS0516LSH	LW-3
	CTDP R/L 20-IN-25D34A-OH2 💧	2	●	●	1.260	32.0	.098	2.5	.787	20	.787	20	.945	24	4.729	120	.157	4.0	1.122	28.5	2.953	75	Rc1/8(PT1/8)	.793	20.15	CS0516LSH	LW-3

CTDP Series - Inserts

■CTDP

Shape		Item Number	w (Inch)	(mm)	L (Inch)	(mm)	θ	r_ε (Inch)	(mm)	Coated Carbide DM4	QM3	TM4
Two-sided	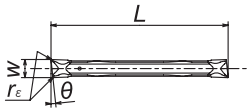 Neutral style shown	CTDP20N	.079	2.0	.752	19.1	0°	.002	0.05	●	●	○
		CTDP20N02	.079	2.0	.752	19.1	0°	.008	0.2	●	●	○
		CTDP20R6	.079	2.0	.752	19.1	6°	.002	0.05	●	●	○
		CTDP20R15	.079	2.0	.752	19.1	15°	.002	0.05	●	●	○
	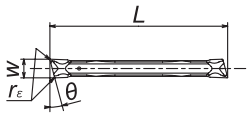 Right-Hand style shown	CTDP25N	.098	2.5	.835	21.2	0°	.002	0.05	●	●	○
		CTDP25N02	.098	2.5	.835	21.2	0°	.008	0.2	●	●	○
		CTDP25R6	.098	2.5	.835	21.2	6°	.002	0.05	●	●	○
		CTDP25R15	.098	2.5	.835	21.2	15°	.002	0.05	●	●	○

Cutting Condition ➜S5

● : Stock
● : Stock (Newly added)
■ □ R L : While stocks last
R L : Stock (Right / Left-hand only)
R L : Stock (Right / Left-hand only, Newly added)
Ⓜ : Mirror finish
○ : 1-2 week delivery
○ : 1-2 week delivery (Newly added)
💧 : Coolant through
Ⓡ Ⓛ : 1-2 week delivery (Right / Left-hand only)
Ⓡ Ⓛ : 1-2 week delivery (Right / Left-hand only, Newly added)

CTWP Series

Max. Cut-off Dia. -ϕ1.653"(42.0mm)

CTWP

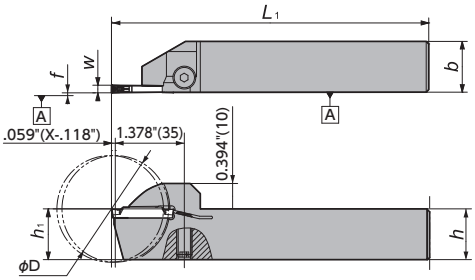

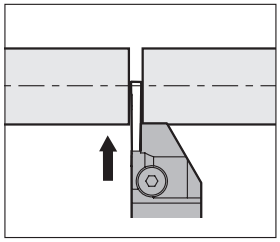

Right-Hand style shown

CTWP Series - Toolholders

■CTWP

Gage Insert	Item Number	Stock R	Stock L	Max. Cut-off Dia. D_m (Inch)	(mm)	w (Inch)	(mm)	h (Inch)	(mm)	b (Inch)	(mm)	h_1 (Inch)	(mm)	L_1 (Inch)	(mm)	f (Inch)	(mm)	Clamp Screw	Wrench
GWPFM300	CTWPR/L12-IN-3D42	●	●	1.653	42.0	.118	3.0	3/4		3/4		3/4		5.0	127	.760	19.30	CS0619LSHW	LW-3
	CTWPR/L16-IN-3D42	●	●	1.653	42.0	.118	3.0	1		1		1		6.0	152.4	1.010	25.65	CS0623LSHW	LW-4
	CTWPR/L2012K-3D42	○	○	1.653	42.0	.118	3.0	.787	20	.472	12	.787	20	4.921	125	.482	12.25	CS0623LSHW	LW-5
	CTWPR/L2020K-3D42	●	●	1.653	42.0	.118	3.0	.787	20	.787	20	.787	20	4.921	125	.797	20.25	CS0623LSHW	LW-6
	CTWPR/L2525M-3D42	●	●	1.653	42.0	.118	3.0	.984	25	.984	25	.984	25	5.906	150	.994	25.25	CS0623LSHW	LW-7

CTWP Series - Inserts

■CTWP

Shape	Item Number	w (Inch)	(mm)	r_ε (Inch)	(mm)	M (Inch)	(mm)	L (Inch)	(mm)	Coated Carbide DM4
	GWPFM300N02-GT	.118	3.0	.008	0.2	.087	2.2	.965	24.5	●
	GWPFM300N04-GT	.118	3.0	.016	0.4	.087	2.2	.965	24.5	●

Feed IPR	CUT MAX Chip	CUT MAX Surface finish	Competitor A (3D molded low cutting force type chipbreaker) Chip	Competitor A Surface finish	Competitor B (3D molded rigid type chipbreaker) Chip	Competitor B Surface finish
.0012						
.0020				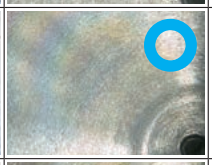		
.0039						
	Excellent machined surface finish		In high feed rate area, rough surface finish		In low feed rate area, rough surface finish	

Cutting condition : 330SFM WET Material : 1045 (ϕ1.653")
Holder : CTWPR2020K-3D42 Insert : GWPFM300N02-GT DM4

● : Stock
● : Stock (Newly added)
■□RL : While stocks last
R L : Stock (Right / Left-hand only)
R L : Stock (Right / Left-hand only, Newly added)
Ⓜ : Mirror finish
○ : 1-2 week delivery
○ : 1-2 week delivery (Newly added)
💧 : Coolant through
ⓇⓁ : 1-2 week delivery (Right / Left-hand only)
ⓇⓁ : 1-2 week delivery (Right / Left-hand only, Newly added)